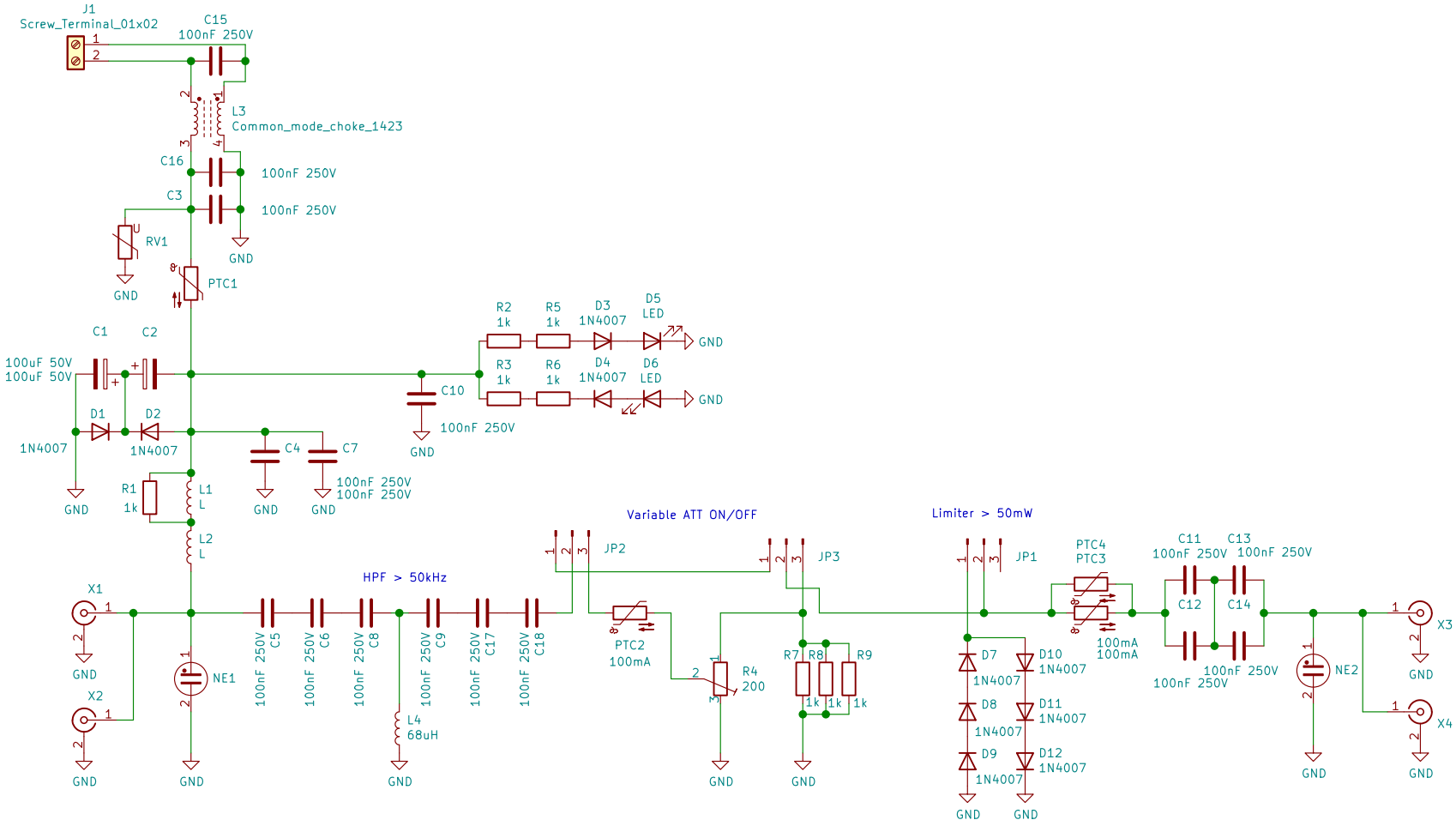

H1
MountingHole

QRO.cz | OK2ZAW

Sheet: /
File: Bias_Tee_AC-DC_POC.sch

Title: Bias Tee ACDC BOX

Size: A4	Date: 2021-12-24	**Rev: 1.1 12/2021**
KiCad E.D.A. kicad (5.1.9)-1		Id: 1/1