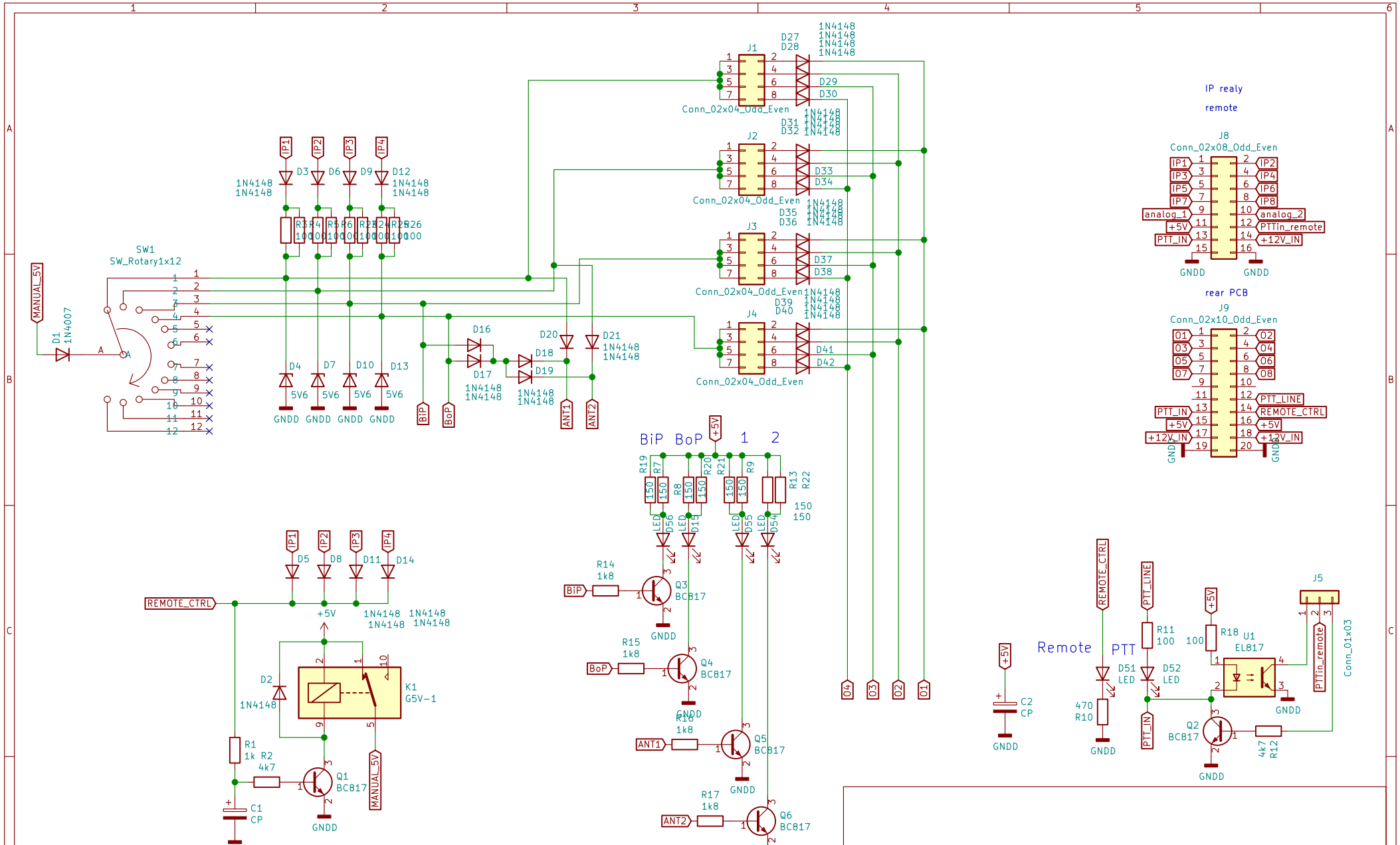

www.QRO.cz & OK2ZAW

Sheet: /

File: SM1-2_FP.sch

Title: Stack Match 1-2 front panel

Size: A4	Date: 2021-01-27	Rev: v0.1
KiCad E.D.A. kicad (5.1.12)-1		Id: 1/1