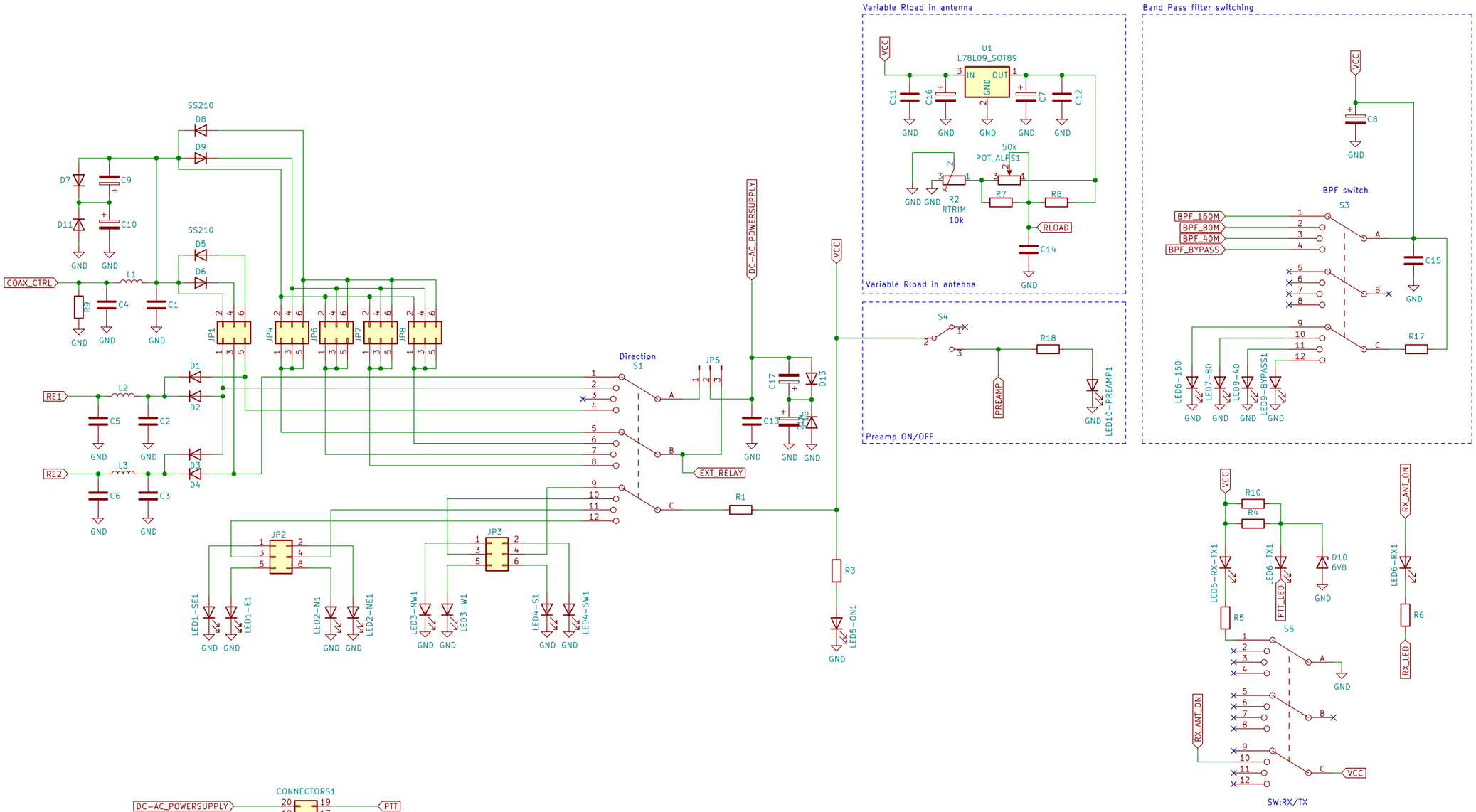

QRO.cz

Sheet: /

File: K9AY_Front_Panel.sch

Title: K9AY++ front panel

Size: A3	Date: 2022-03-18	Rev: 2.3
KiCad E.D.A. kicad (6.0.2)		Id: 1/1