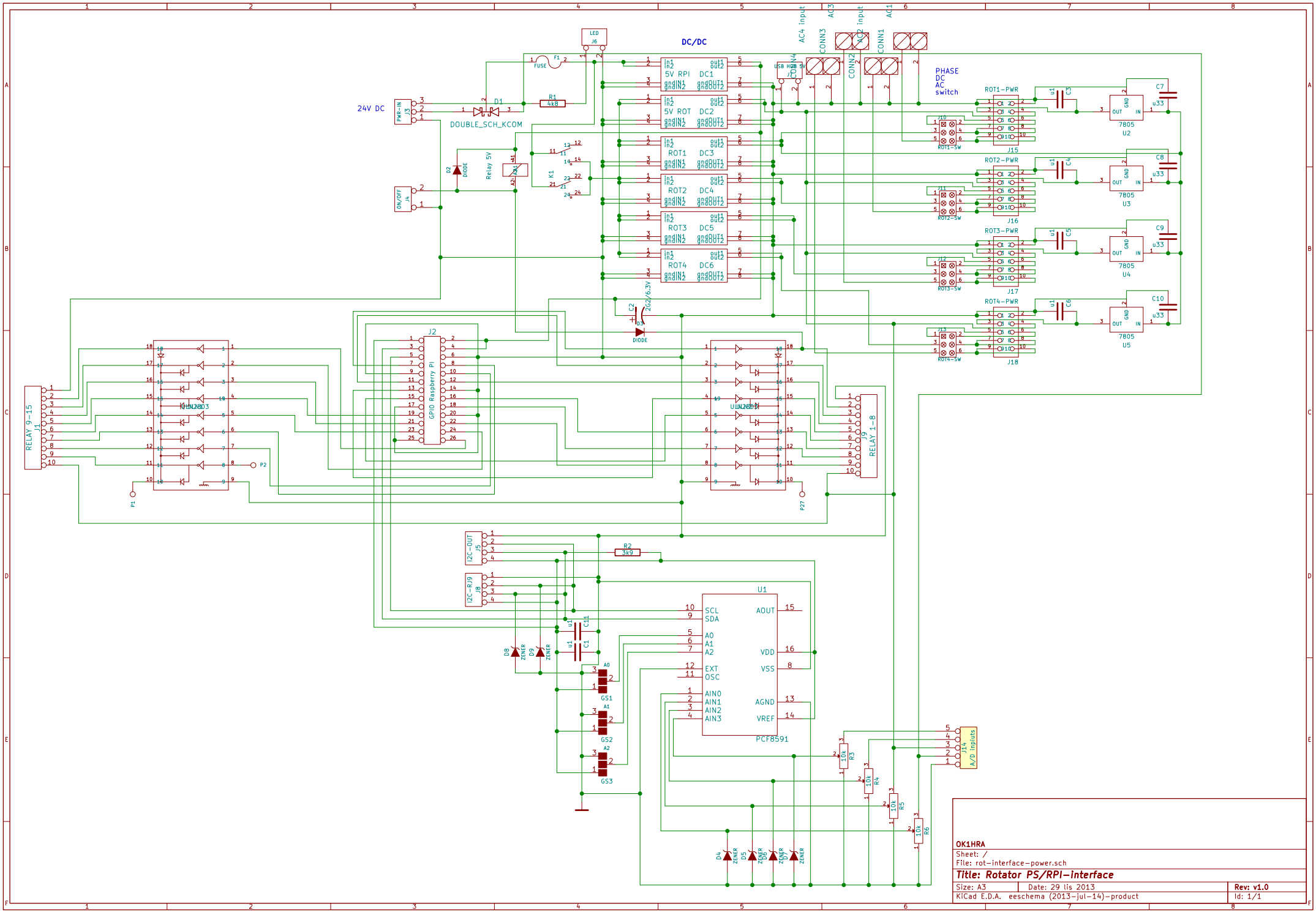


OK1HRA

Sheet: /

File: rot-interface-power.sch

**Title: Rotator PS/RPI-interface**

| | | |
|---|---|---|
| Size: A3 | Date: 29 lis 2013 | Rev: v1.0 |
| KiCad E.D.A. eeschema (2013-jul-14)-product | | Id: 1/1 |