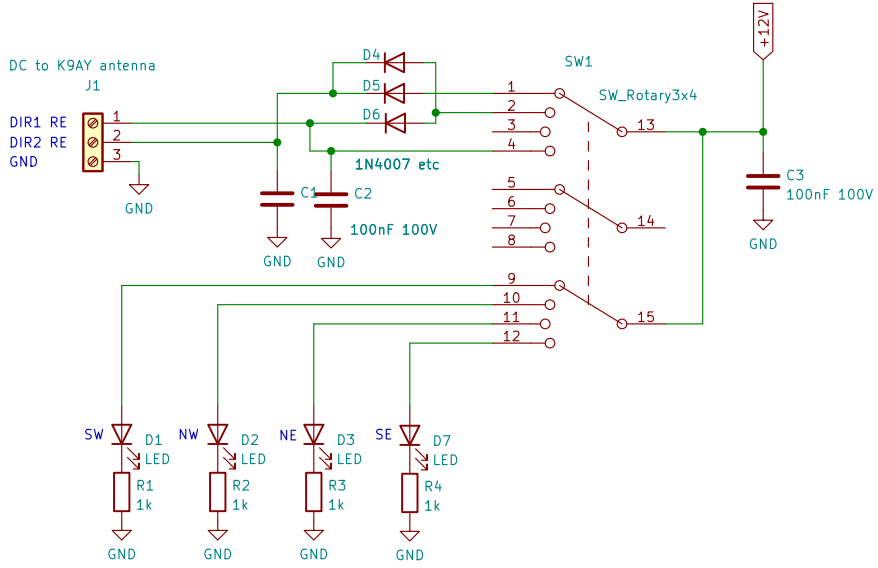

QRO.cz & OK2ZAW

Sheet: /
File: DC.kicad_sch

Title: K9AY DC controller example

Size: A4	Date: 2022-04-05	**Rev: ver. 0.1**
KiCad E.D.A. kicad (6.0.2)		Id: 1/1